RoHS

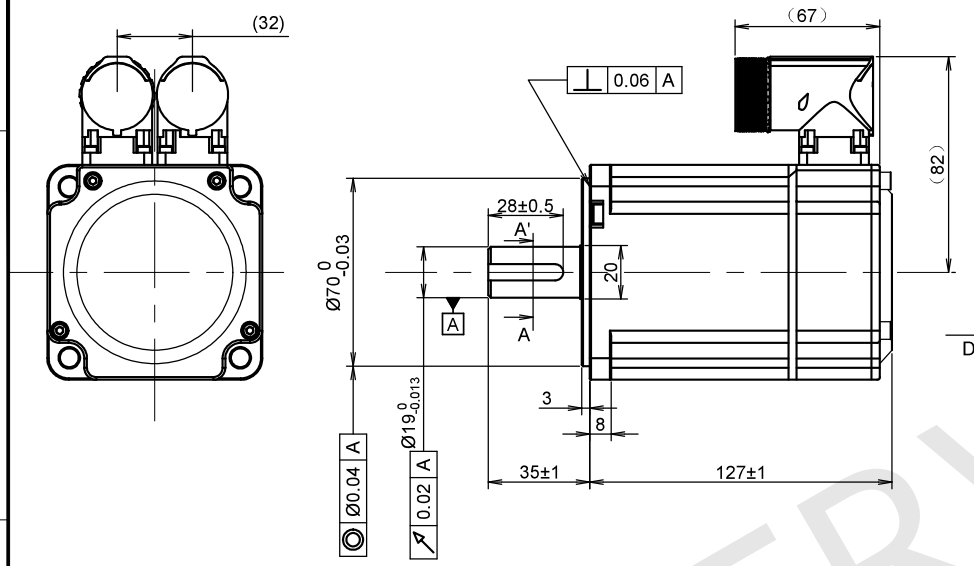

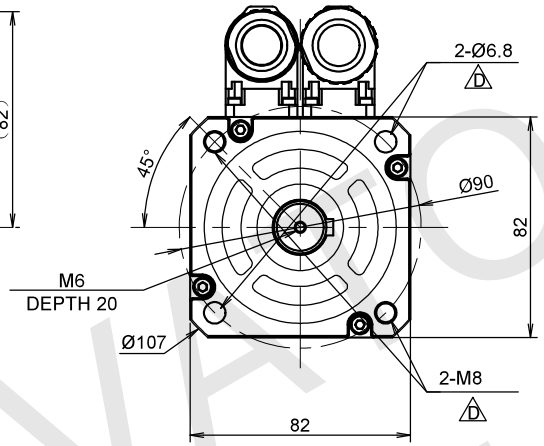

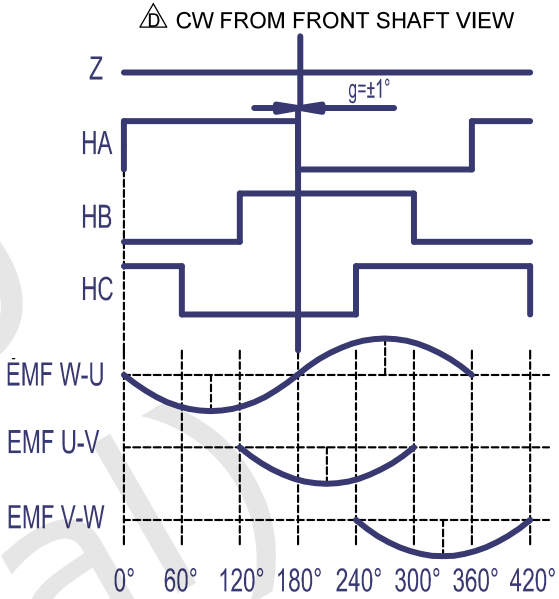

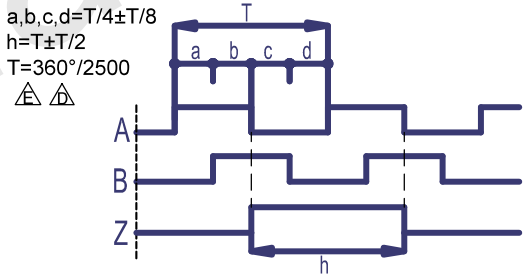

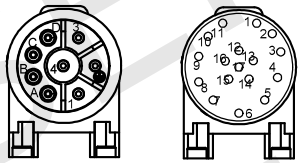

Motor power line: M23 8PINS (MALE)

Motor signal line: M23 17PINS (MALE)

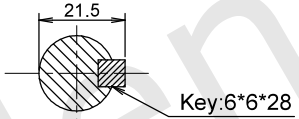

A-A' VIEW

ENCODER SPECIFICATIONS	
ENCODER TYPE	Incremental encoder
POWER SUPPLY	5.00 Vdc
RESOLUTION	2500 ppr
OUTPUT TYPE	Line Driver
MOTOR SPECIFICATIONS	
POLE PAIRS	5
APPLIED VOLTAGE	200Vac ~ 250Vac
RATED POWER	750 W
RATED CURRENT D	5.16 A
RATED TORQUE	2.39 Nm
PEAK TORQUE D	8.40 Nm
RATED SPEED	3.000 rpm
NO LOAD SPEED	6.000 rpm
ROTOR INERTIA	1440 g.cm²
RESISTANCE D	1.50 ohm ±10%
INDUCTANCE D	3.73 mH ±20%
PEAK CURRENT D	18.10 A
TORQUE CONSTANT D	0.46 Nm/A ±10%
BACK EMF CONSTANT D	31.60 Vrms/Krpm
WEIGHT	2600 g. approx
IP CODE	IP65 (except for the shaft extension)

WIRING DIAGRAM

Motor power line:

PiN NO.	1	2	3	4	A	B	C	D
Signal	U	Ground	V	W	---	---	---	---

Motor signal line: C

PiN NO.	1	2	3	4	5	6	7	8	9	10	11	12	13	14	15	16	17
Signal	+5 VDC	GND	A	A/	B	B/	Z	Z/	---	---	Hall HA+	Hall HA-	Hall HB+	Hall HB-	Hall HC+	Hall HC-	---

LABELS

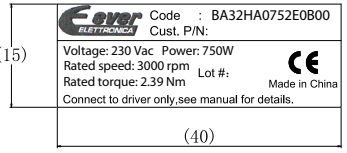

YYWWXXXXX (25 x 8)

Stator barcode label

UNIT: mm
UNLESS OTHERWISE SPECIFIED TOLERANCES
DIMENSIONS : ±0.3 mm DEGREES : ±5%
ORTHOGRAPHIC PROJECTION

DRAWING NOT TO SCALE

DESIGN	Stm02668-00e
CHECK	
APPROVED	Matteo C. - 30 / 11 / 2023
DATE	30 / 11 / 2023

REV	
	00a - First release.
	00b - Changed the motor structure.
	00c - Changed the Hall signals.
	00d - Add diagrams and changed some parameters .
	00e - Update encoder waveform.

BA32HA0752E0B00

AC BRUSHLESS MOTOR SPECIFICATION

ever ELETTRONICA
the clever drive
www.everelettronica.it

RISERVATO (Confidential)